TOLERANCE UNLESS OTHERWISE SPECIFIED	
.X	±0.25
.XX	±0.13
.XXX	±0.05

THIS IS A C.A.D. GENERATED DRAWING
DO NOT MAKE MANUAL REVISIONS TO MASTER.

ISSUE NUMBER	
ORIGINAL	1

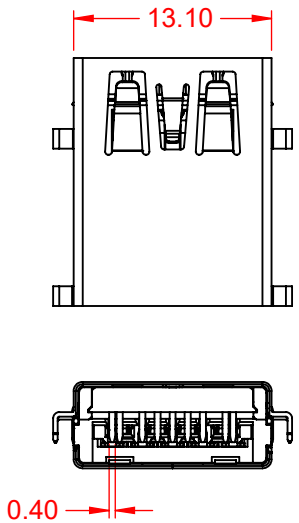

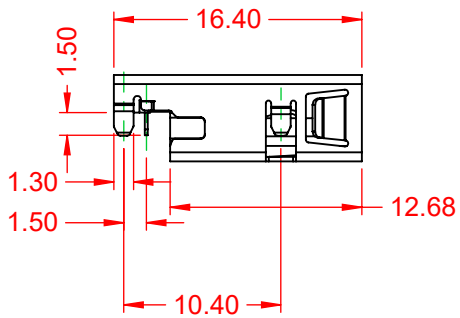

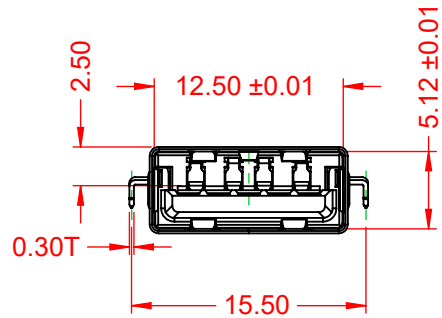

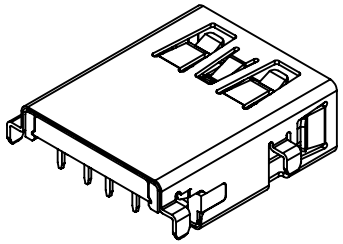

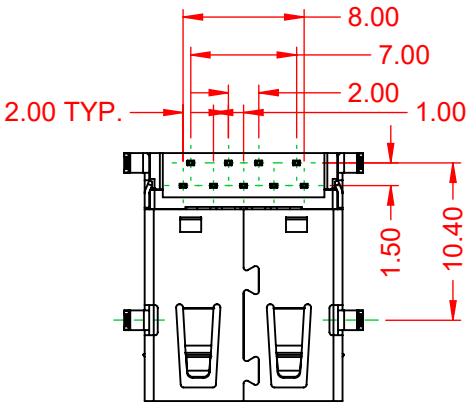

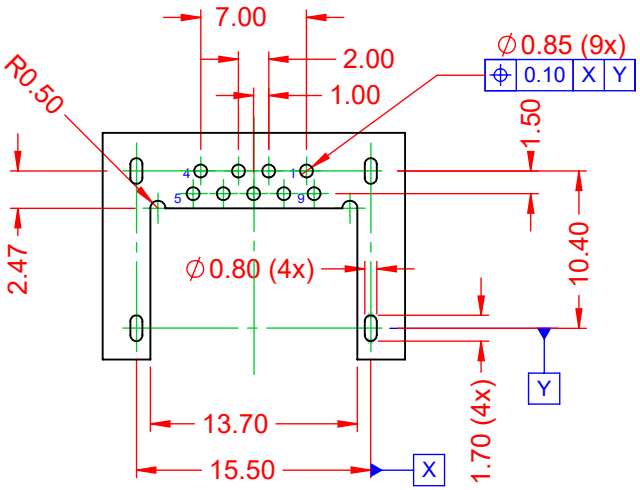

RECOMMENDED P.C.B HOLE LAYOUT
TOP VIEW (TOLERANCE: ±0.05)

NOTE:
ELECTRICAL SPECIFICATIONS:

VOLTAGE RATING:	30V MAX.
CURRENT RATING:	1.8A FOR PIN 1~4 0.25A FOR PIN 5~9
CONTACT RESISTANCE:	30mΩ MAX. FOR 1~4 PIN 50mΩ MAX FOR 5~9 PIN
INSULATOR RESISTANCE:	100MΩ min.
DIELECTRIC WITHSTANDING VOLTAGE:	100V AC
OPERATING TEMPERATURE:	-20°C ~ 60°C

MATERIAL & FINISH:

SHELL:	STAINLESS STEEL, NICKEL PLATED
HOUSING:	PA9T, BLUE IN COLOUR, UL94V-0
CONTACTS:	COPPER ALLOY, GOLD FLASH PLATED

RoHS COMPLIANT

THIS SERIES FULLY CONFORMS TO THE EUROPEAN UNION DIRECTIVES 2011/65/EU FOR RoHS COMPLIANCY.

690 SERIES RECEPTACLES USB 3.0
TYPE-A MID-MOUNT PCB

ACAD REFERENCE NO.: 690H509-X52-252	
DRAWN: C.B	DATE: December 18, 2020
CHECKED:	DATE:
SCALE: 2:1	SHEET 1 OF 1
DRAWING NUMBER: 690H509-X52-252	ISSUE 1
PART NUMBER: 690H509-252-252	

EDAC
YOUR CONNECTION TO QUALITY & SERVICE

EDAC INC
TORONTO, ONTARIO
CANADA

THESE DRAWINGS AND SPECIFICATIONS ARE THE PROPERTY OF EDAC INC.,AND SHALL NOT BE REPRODUCED,OR COPIED OR USED AS THE BASIS FOR THE MANUFACTURE OR SALE OF APPARATUS WITHOUT WRITTEN PERMISSION.